C&R INTERIORS

POLO

TASK CHAIR

CR™

MINIMALIST MODERN

The Polo chair is designed with clean and smooth lines that make it an important element in modern office aesthetics .

COMFORT & CLASSIC

Although technology changed our working condition , the comfort should never be compromised . Polo Chair is a comfortable economic chair that fit modern offices with various configurations . You feel the comfort at the moment you sit on it .The classic color of black could fit both home and office environments.

Specifications

Double Support Lumbar

The height adjustable lumbar support designed with elastic PP frame and foam with effective stroke of 50mm to keep user sitting in correct sitting position with comfortable support on the spine.

Armrest
2D Armrest

Mechanism
Spring head mechanism,15°back tilt, lock at the original position

Base
Nylon Base

Dimensions

POLO TASK CHAIR

A classic with impressive sitting comfort. Polo is one of the most successful office task chairs ever developed. It's ergonomically exceptional, intuitive to use and adaptable. The backrest has double support lumbar to safety the back.
Highly developed ergonomic feature which prevents injury through poor posture

TECHNICAL DETAILS

PO600

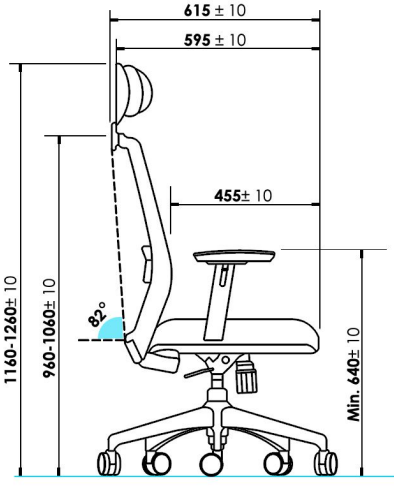

HIGH BACK (SIDE VIEW)

PO602

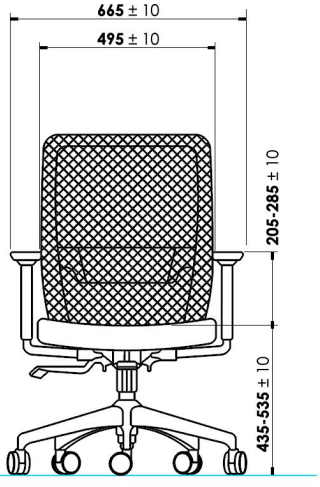

MID-BACK FRONT VIEW

High Back with
Height Adjustable Armrest

Mid - Back with
Height Adjustable Armrest

Function & Features

Height Adjustable Headrest

5-position height adjustments, effective stroke 20mm

Breathable mesh

Durable and high density elastic mesh

2D Armrest

PU pads , forward & backward adjustment, height adjustable armrests

Lumbar Support

Height adjustable lumbar support

Seat

Fabric seat 100% Polyester

Mechanism

Spring-Head Mechanism

Base

Nylon five star base

2D PU Armrest

The height adjustable armrests come with durable soft PU pad could move forward and backward, which support your arms in comfort with less stress on your shoulders.

C&R INTERIORS

Export Sales | export@cnrinteriors.com.sg
Local Sales | admins@cnrinteriors.com.sg
Head Quarters | 57/59 Defu Lane 9 Singapore 539295
tel +65 6488 0577
fax +65 6488 0588
Showroom | 100 Pasir Panjang Road #01-01 Singapore 118518
tel +65 6372 0428
fax +65 6255 4288

www.cnrinteriors.com.sg